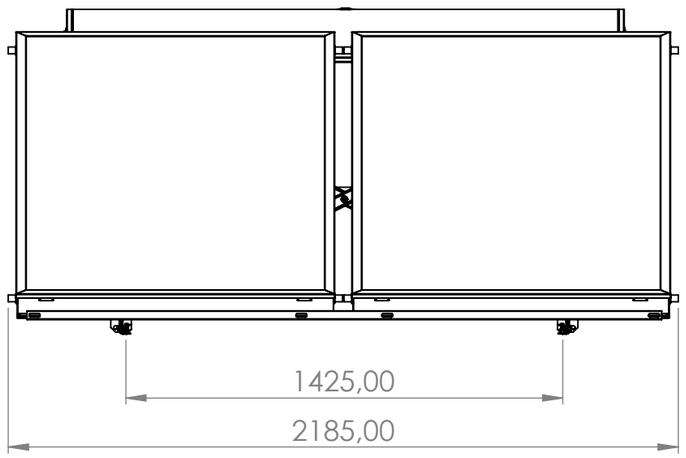

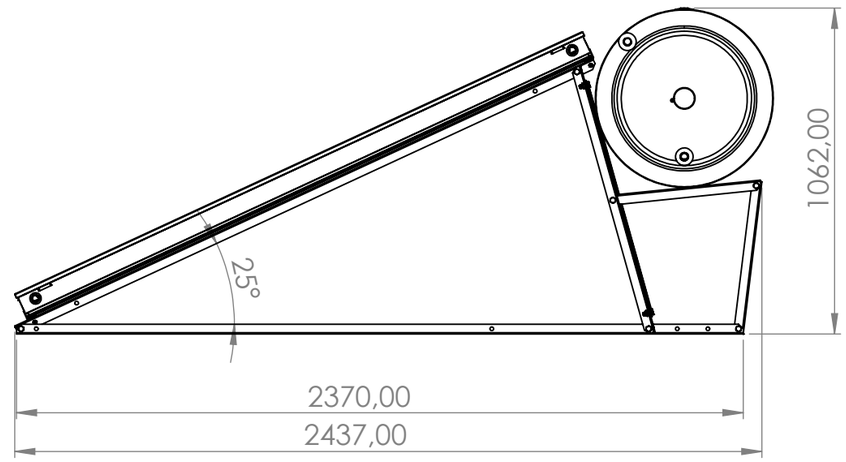

UNLESS OTHERWISE SPECIFIED: DIMENSIONS ARE IN MILLIMETERS SURFACE FINISH: TOLERANCES: LINEAR: ANGULAR:	FINISH:			DEBURR AND BREAK SHARP EDGES	DO NOT SCALE DRAWING	REVISION
	NAME	SIGNATURE	DATE		Sammler® SOLAR THERMAL SYSTEMS	
DRAWN					TITLE:	
CHK'D						
APPV'D						
MFG						
Q.A				MATERIAL:	DWG NO. EVO300-42	A3
				WEIGHT:	SCALE:1:50	SHEET 1 OF 1