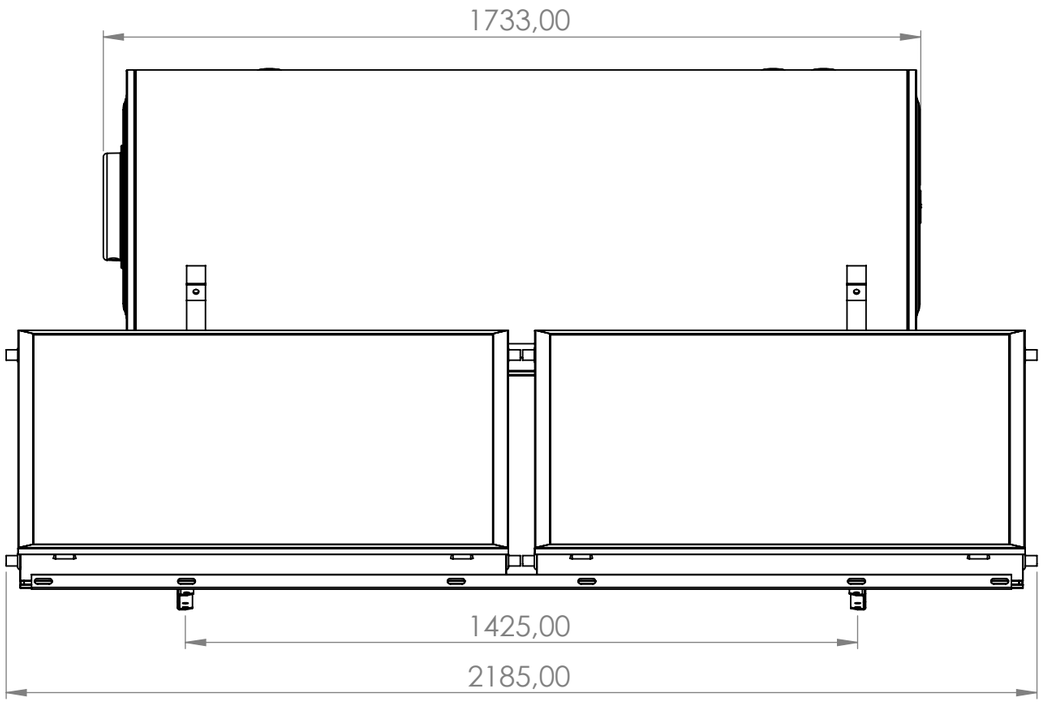

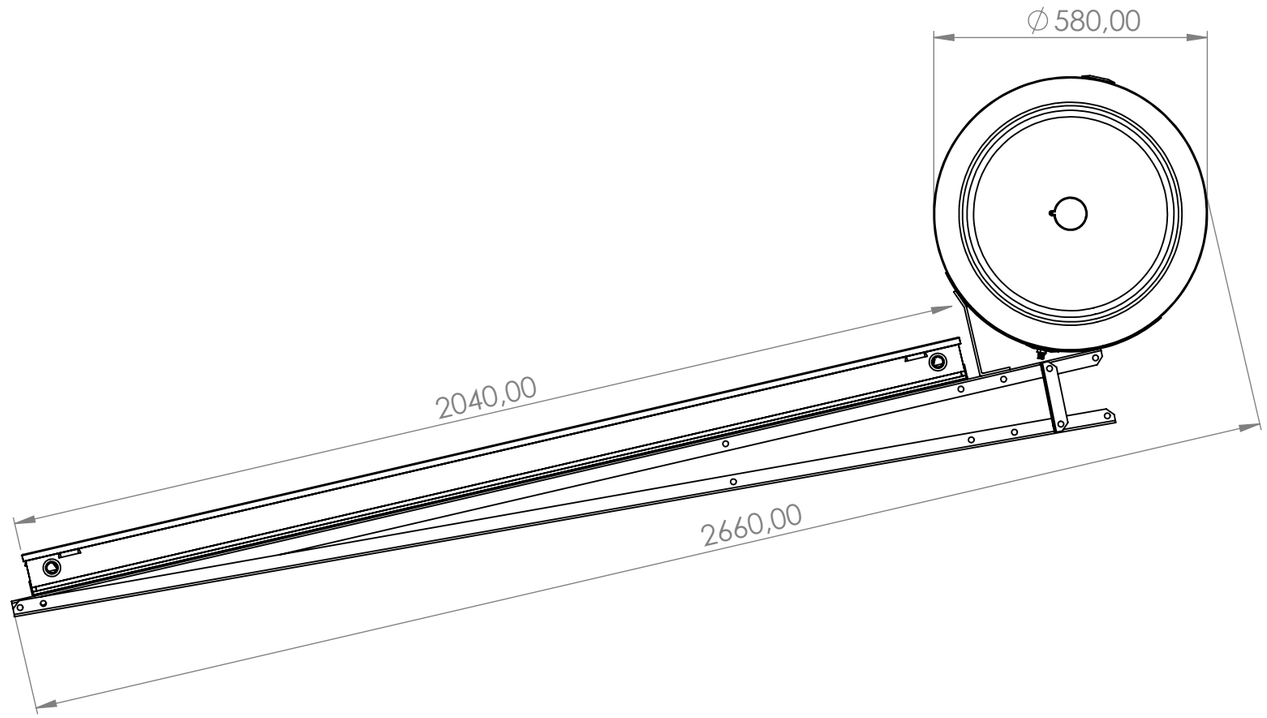

UNLESS OTHERWISE SPECIFIED: DIMENSIONS ARE IN MILLIMETERS SURFACE FINISH: TOLERANCES: LINEAR: ANGULAR:	FINISH:				DEBURR AND BREAK SHARP EDGES	DO NOT SCALE DRAWING / REVISION
	NAME	SIGNATURE	DATE			TITLE:
DRAWN	SPANOS TH					
CHK'D	MICHALOPOULOS					
APPV'D	MICHALOPOULOS					
MFG						
Q.A	GEORGIOU			MATERIAL:		DWG NO. S300-42-00NV
				WEIGHT:		SCALE:1:50 / SHEET 1 OF 1

Sammler® SOLAR THERMAL SYSTEMS

A3